PART NO. 901601Sx50x

DWG NO. C9016Sx

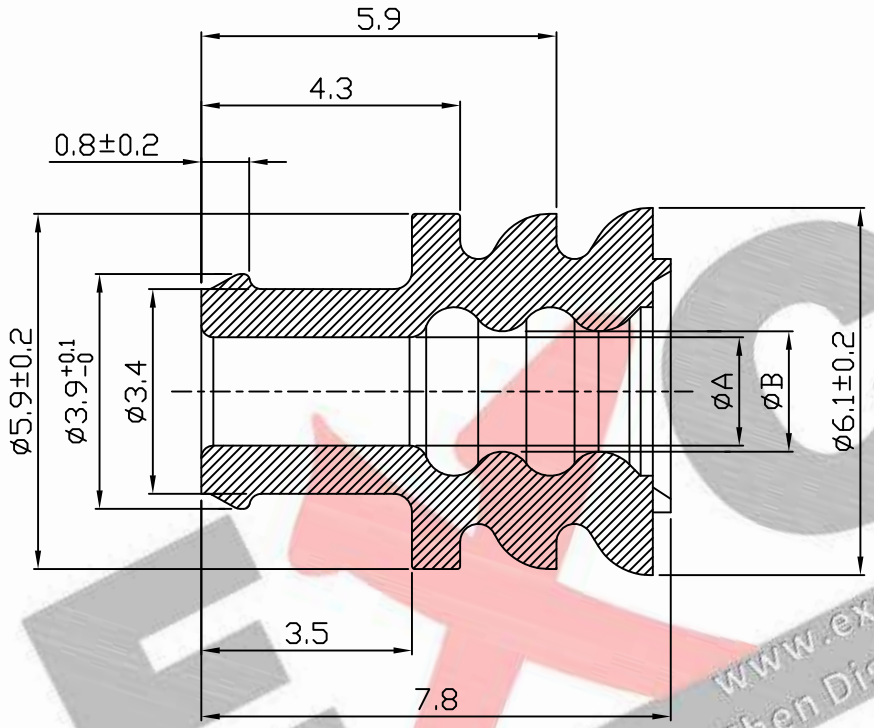

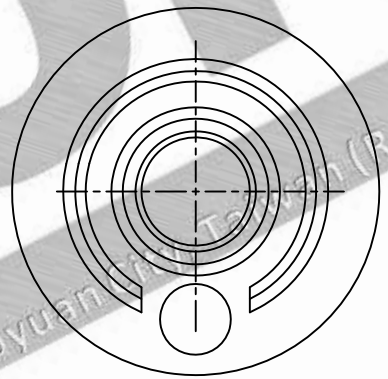

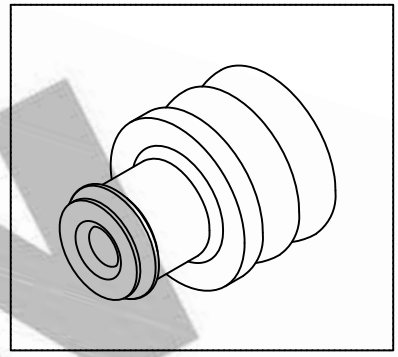

EXCON
www.excon.com.tw
88, Ping Long Road, Ping Zhen Dist., 32460 Taoyuan (R.O.C)

Part No.	Material	Color	Dim A	Dim B	Suitable for INS. DIA
901601SA507	Silicone rubber (LSR)	Yellow	1.4±0.2	1.4±0.2	1.7–2.4
901601SB505		Red	1.8±0.2	2.0±0.2	2.5–3.3
901601SC508		Green	1.0±0.2	1.0±0.2	1.2–1.6
901601SD501	Fluorsilicone rubber (FSR)	White			

REV.	REVISIONI	DIS	DATE

UNLESS OTHERWISE SPECIFIED TOLERANCES
3 PLACE ±0.5 ±0.10
2 PLACE ±1.5 ±0.35
1 PLACE ±2.0 ±0.50
ANGLE DIM

EXCON

EXCON TECHNOLOGY COMPANY

SCALE	REV.	PAGE:	UNIT mm	DWG NO:	PART.NO
5/1	A	1	THIRD ANGLE PROJECTION	C9016Sx	901601Sx50x